Compact™ Borehole Geometry (CBG) Tool

Weatherford's *Compact* borehole geometry (CBG) tool is an eight-arm caliper tool that provides six independent caliper measurements, as well as the tool azimuth, deviation, and relative bearing—providing a precise borehole geometry measurement in open hole.

The tool's eight-caliper arms are in two planes. The upper four arms are cross-linked, helping to centralize the tool and provide two diameter measurements. The lower four arms are independently articulated and provide four independent radii measurements. The integrated orientation package enables the precise borehole geometry measurement in open hole.

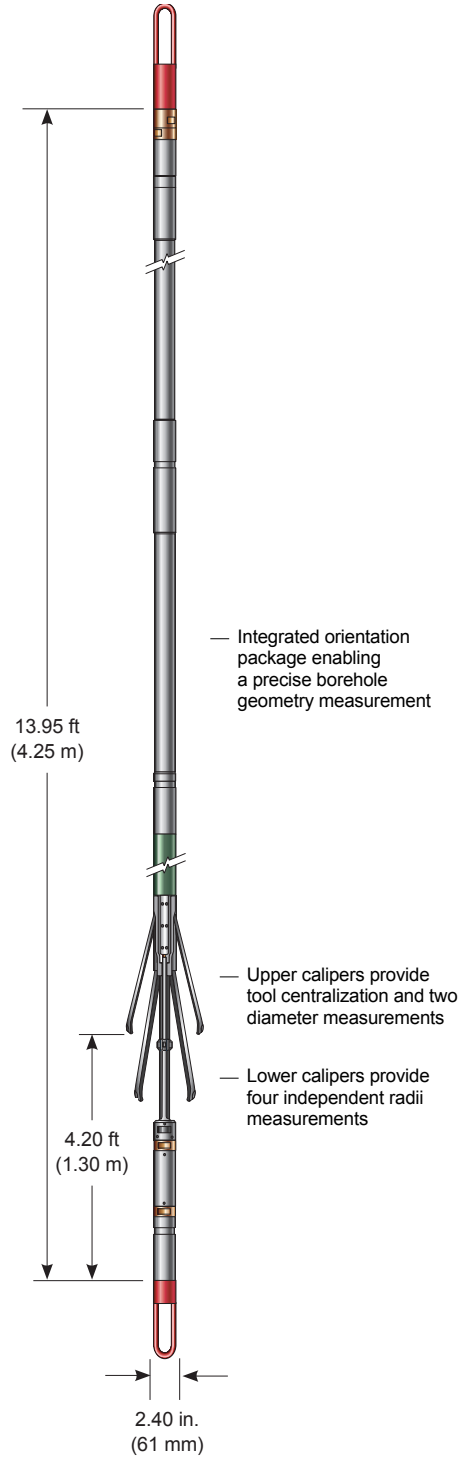

Applications

- Borehole geometry
- Directional information
- Borehole volume
- Cement volume
- True vertical depth (TVD)

Features, Advantages and Benefits

- The CBG tool's small diameter provides flexible deployment, resulting in increased efficiency.
- Because the CBG tool can be run in wireline or memory mode, it offers flexible deployment and data assurance—ultimately increasing efficiency.
- The CBG tool is fully combinable with other *Compact* tools, which reduces logging time.
- The CBG tool can be run with all *Compact* conveyance options, providing additional flexible deployment and data assurance. *Compact* conveyance options include wireline, thru-drillpipe logging, *Compact* well shuttle, coiled tubing, thru-the-bit technology, slickline and heavy-duty wireline, wireline drop-off, COROD® continuous rod, wireline tractor, and pipe-conveyed logging.

© 2010–2012 Weatherford. All rights reserved.

Compact™ Borehole Geometry (CBG) Tool

Log Presentation

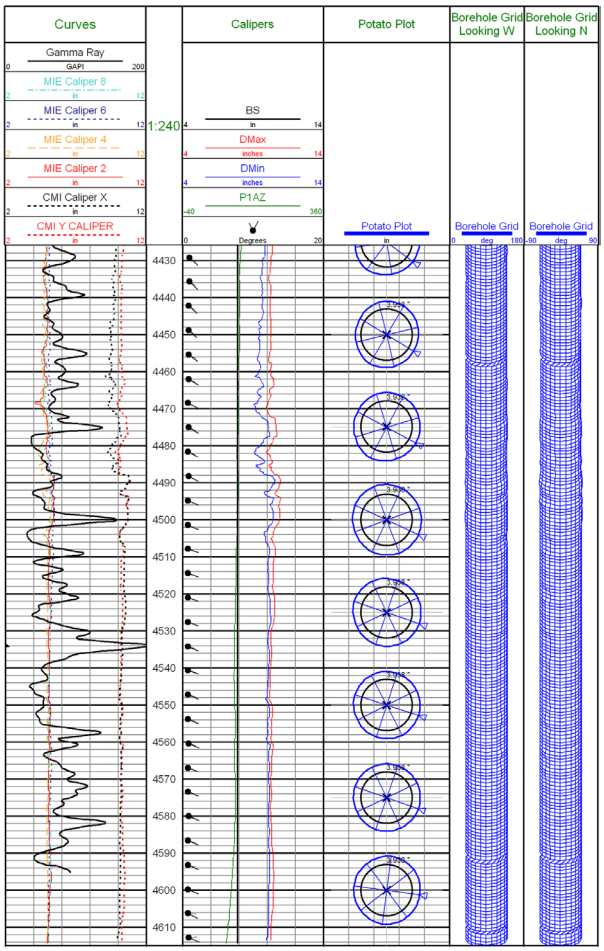

Specifications

Measurement specifications

Data	6 calipers, tilt, azimuth
Logging speed	1,800 ft/hr (9 m/min)
Measurement range	Caliper: 2.4 to 19.5 in. (61 to 495 mm)
	Tilt: 0° to 180°
	Azimuth: 0° to 360°
Vertical resolution	Caliper: 1 in. (25 mm)
	Tilt: 1 in. (25 mm)
	Azimuth: 1 in. (25 mm)
Accuracy	Caliper: 0.1 in. (2.5 mm)
	Tilt: ±1°
	Azimuth: ±5°
Depth of investigation	Borehole measurement
Borehole fluids	WBM OBM Salt Air

Mechanical specifications

Outer diameter	2.4 in. (61 mm)
Length	13.95 ft (4.25 m)
Total weight (in air)	100 lb (45.4 kg)
Maximum pressure	15 kpsi (103 MPa)
Maximum temperature*	275°F (135°C)
Maximum borehole diameter	19.5 in. (495 mm)
Minimum borehole diameter	3.0 in. (76 mm)

* Maximum temperature 275°F (135°C)
To be rated to 300°F (150°C) in 2013

Options

- An optional memory sub can be run with the CBG tool for *Compact* memory logging or for data assurance when run on wireline.

© 2010–2012 Weatherford. All rights reserved.

Weatherford products and services are subject to the Company's standard terms and conditions, available on request or at weatherford.com. For more information contact an authorized Weatherford representative. Unless noted otherwise, trademarks and service marks herein are the property of Weatherford and may be registered in the United States and/or other countries. Weatherford products named herein may be protected by one or more U.S. and/or foreign patents. For more information, contact patents@weatherford.com. Specifications are subject to change without notice. Weatherford sells its products and services in accordance with the terms and conditions set forth in the applicable contract between Weatherford and the client.